LEDWIDE
LEDWIDE LIGHTING CO.,LTD

Tel: 0086 755 29362351 Direct: 0086 0 18680360436
Fax: 86 755 29014058 E-mail: info@ledwide.com
www.ledwide.com
Address:1-2/F, Building A2,Sinopol Ind.Park, First Industrial Zone, BaiHua communities, Guangming New District, Shenzhen, P.R. China Postcode: 518107

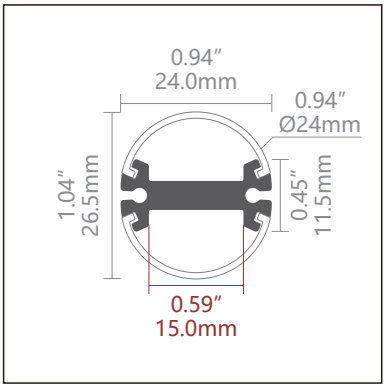

Aluminium LED Profile
LW-R24-T

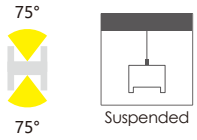

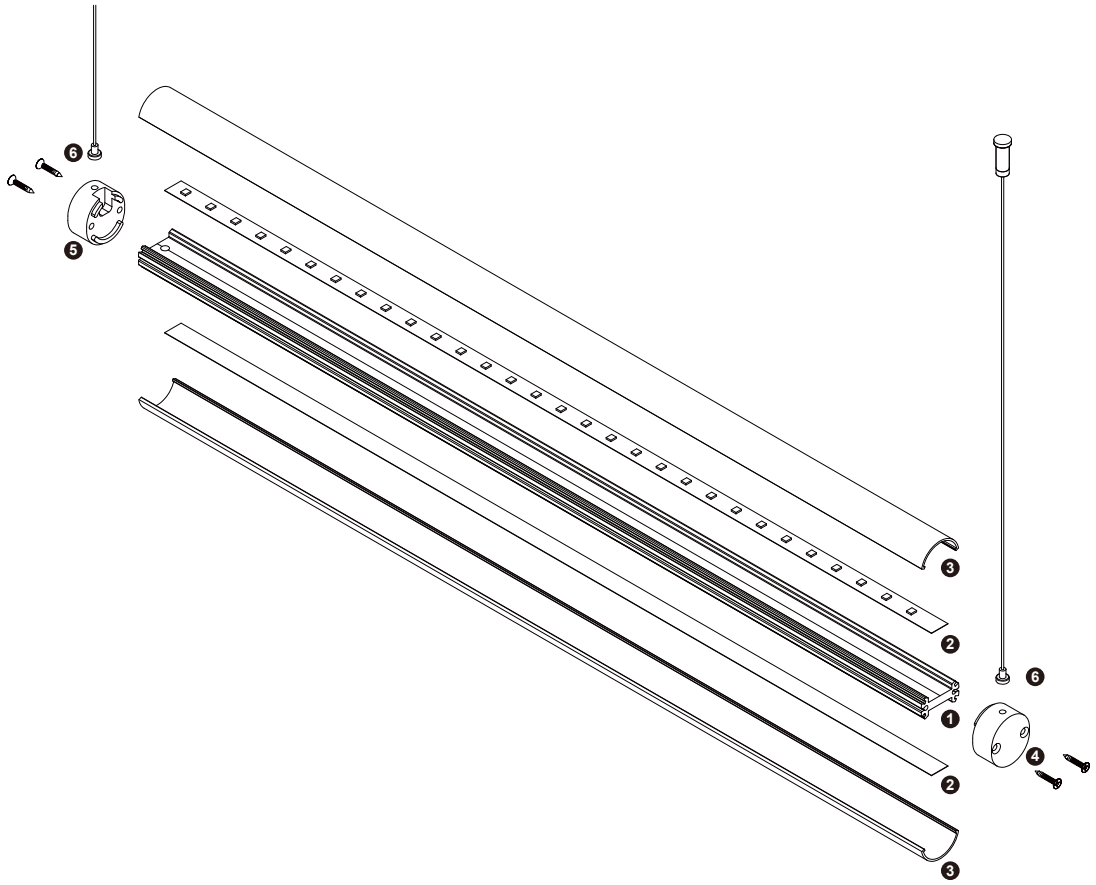

	Name	Code	Material	Color	Other
❶	Aluminum Profile	R24-T	Aluminum	Silver / White / Black / RAL color	-
❷	LED strip	-	-	-	MAX. 19.2 W/m
❹	Endcap (without hole)	R24-T-Cap	Aluminum	Silver / White / Black / RAL color	-
❺	Endcap (with hole)	R24-T-Cap-H	Aluminum	Silver / White / Black / RAL color	-
❻	Suspension Kits	Sus.Kits	Stainless Steel	ecru	-

❸ **Optional Diffuser (PMMA/PC)**

Color	Light Transmittance	Code
Opal	47%	R24-O
Frosted	56%	R24-F

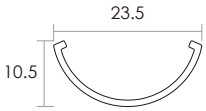

Installing Instructions

Suspended

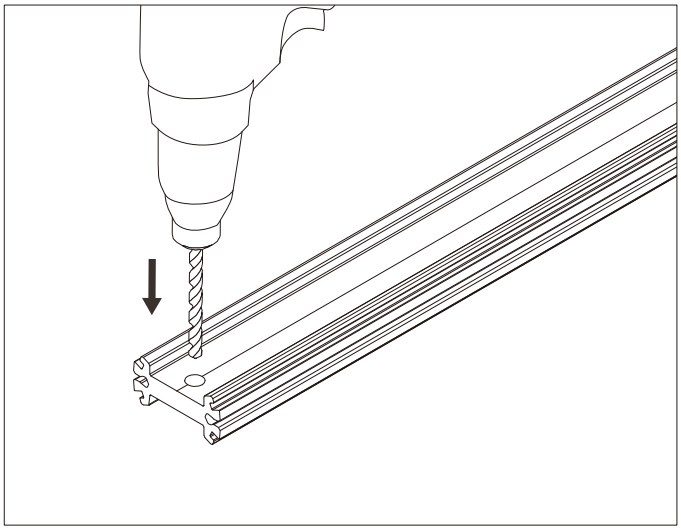

1. Drill a hole on the profile.

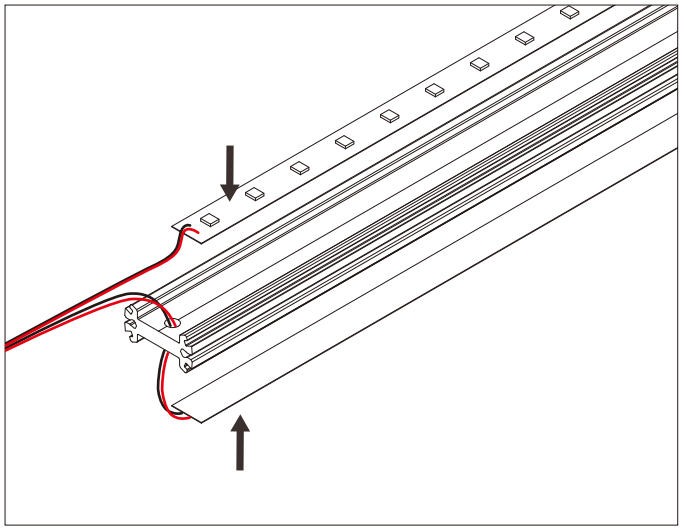

2. Fit the led strips on the profile.

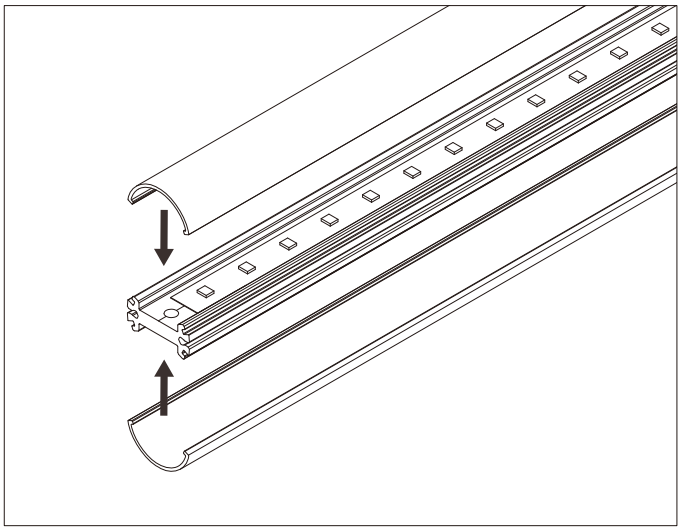

3. Press the diffusers from one end to the other.

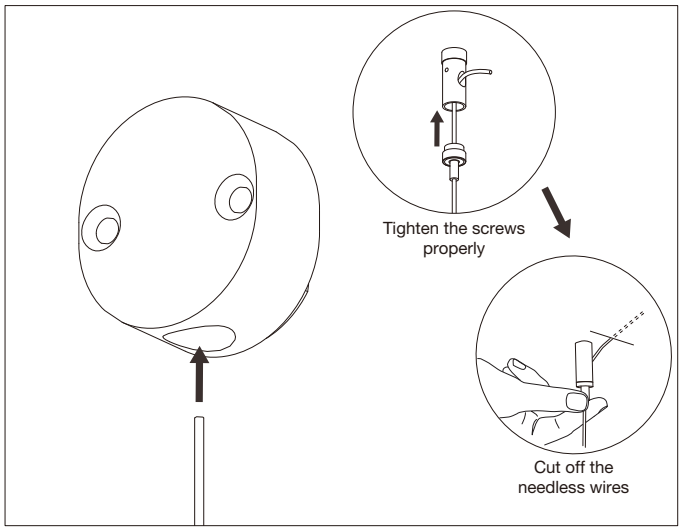

4. Install the suspension kits and adjust the length of the hanging wires.

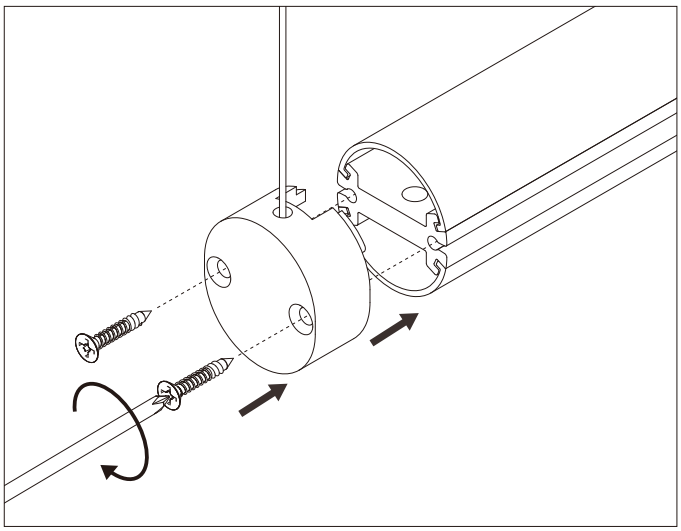

5. Install the endcaps with screws.

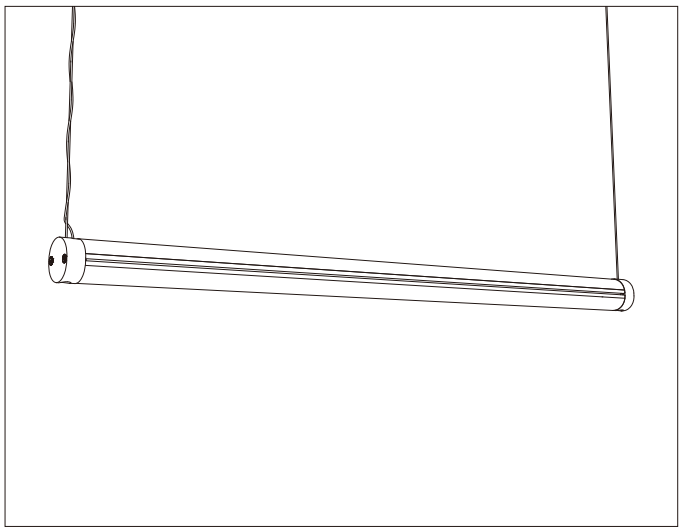

6. Installation completed.